OWNER'S MANUAL
MV AGUSTA F3

245-012-170-010

K-tech

DDS LITE

DIRECT DAMPING SYSTEM

INTRODUCTION

The DDS Lite Rear Shock Absorber has been designed for use at the highest levels of racing and developed in major championships around the world. Like all other K-Tech products it has been designed and manufactured in the UK using the latest software and highest grade materials and processes available.

The championship winning Direct Damping System provides incredible performance and precise tuning for ultimate chassis control in the most demanding conditions of racing shock absorber. The DDS Lite comes with the following specifications listed as standard:

Preload Adjustment
Compression Adjustment
Rebound Adjustment
Length Adjustment

*****This product is not designed or intended for highway use*****

K-Tech Suspension Ltd products are manufactured to fit specific brands and models. Under no circumstances should any K-Tech Suspension Ltd products be fitted to an application other than that for which it has been designed, tested and manufactured.

RECOMMENDED SETTINGS

Shock length	306(-2/+4mm)
Shock stroke	62mm
Spring Rate	90N/m
Spring Preload	9(-3/+7mm)
Comp damping (Black)	12 Clicks Out
Reb damping (Natural)	12 Clicks Out

ADJUSTMENT

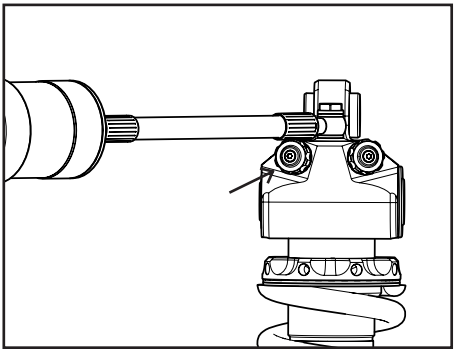

Compression damping:-
Black Adjuster Wheel:- 32 clicks adjustment range. All settings should be made from the fully closed (Clockwise Position).

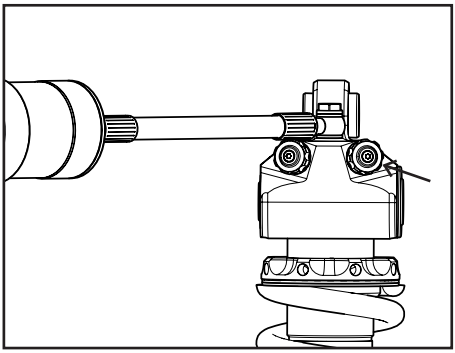

Rebound damping:-
Natural Adjuster Wheel:- 32 clicks adjustment range. All settings should be made from the fully closed (Clockwise Position).

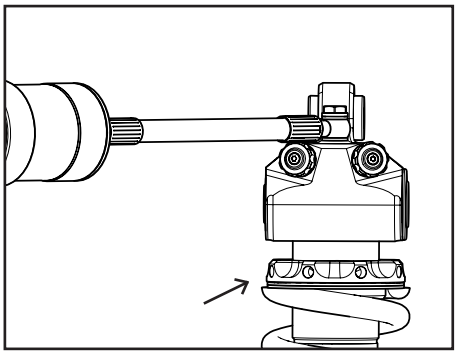

Spring preload:-
Remove securing screw before adjusting preload.
To add preload turn clockwise.
To remove preload turn anti-clockwise.
1 turn = 1.5mm
Always tighten the securing screw after preload has been modified.

ADJUSTMENT

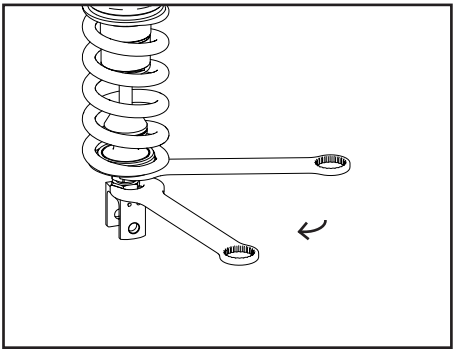

Shock length:-
To adjust the shock length loose the silver lock nut at the bottom of the shock with a 24mm open ended spanner whilst holding the piston rod joiner assembly (Black 24mm nut) with another spanner.

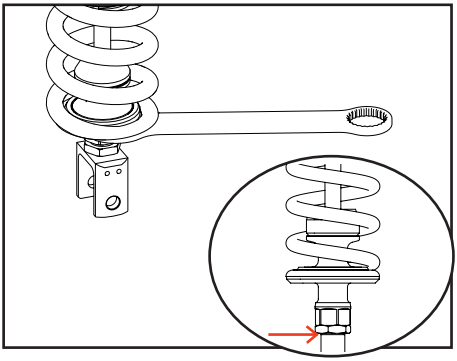

Shock length:-
Turn the rod using the 24mm spanner to get the desired shock length you require. **NB** 1 full turn changes the shock length by 1mm.

Do not extended the length of the shock to the point that the safety groove is visible below the locking nut.

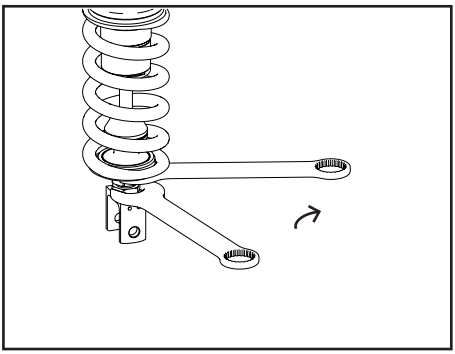

Shock length:-
When you have changed the shock length re-tighten the silver lock nut to the rod joiner using the two 24mm spanners and torque to 30N/m.

FITTING THE SHOCK

This procedure should only be carried out by a qualified motorcycle technician. K-Tech Suspension Ltd will not be liable for any damages caused in any way to/ by the product and any injuries sustained if the product is fitted by someone who is neither an authorised dealer of K-Tech Suspension Ltd or who has the relevant qualifications in motorcycle technology. K-Tech Suspension Ltd will also not be liable if the correct tools are not used throughout the process of fitting and adjustment of a K-Tech suspension Ltd product. Please refer to the manufacturer's workshop manual before attempting this procedure. This procedure will require two people, you will need to remove all relevant bodywork and any other parts that may restrict you from carrying out this task.

Place and secure the motorcycle on an appropriate stand so that the wheel is approximately 5cm off the ground.
Loosen top and bottom mounting bolts using the correct spanners.
With one person holding the rear wheel in a stationary position the second person can remove the top bolt, it may be necessary to slightly move the rear wheel up and down whilst removing the top bolt.
Keeping the rear wheel in a stationary position the second person can now remove the bottom bolt, it will be necessary to hold the shock whilst doing this.

Remove the shock from the bike keeping the rear wheel stationary while doing so. You are now ready to fit the K-Tech rear shock.
Place the shock into the bike fitting the bottom mounting bolt first, it may be necessary for the second person to slowly move the rear wheel up or down for you to insert the bolt through any linkages.
Now fit the top mounting bolt and torque both top and bottom bolts to the manufacturer's recommendations.

Take a slow test drive to make sure that everything is correct.

SERVICE

K-Tech Suspension Ltd recommend that this product is serviced every 20 hours of use. It is very important that this product is serviced by an authorised dealer, as there are special tools required to guarantee correct performance of this product. K-Tech Suspension Ltd cannot be held responsible for any damage caused to/by the product if a service is overdue or was not conducted by an authorised dealer.

WARNING

All of the procedures in this manual should only be carried out by a qualified motorcycle technician. K-Tech Suspension Ltd will not be liable for any damages caused in any way to/by the product and any injuries sustained if the product is fitted or adjusted by someone who is neither an authorised dealer of K-Tech Suspension Ltd or who has the relevant qualifications in motorcycle technology. K-Tech Suspension Ltd will also not be liable if the correct tools are not used throughout the process of fitting and adjustment of a K-Tech suspension Ltd product. Please refer to the manufacturer's workshop manual before attempting these procedures. These procedures will require two people, you will need to remove all relevant bodywork and any other parts that may restrict you from carrying out these tasks.

NOTES

NOTES

www.ktechsuspension.com

Contact your local K-Tech dealer for more details at
www.ktechsuspension.com/service-centres-and-partners

©Copyright K-Tech Suspension Ltd 2017