OWNER'S MANUAL
HONDA CB500

120-013-130-010

K-tech

20IDS

INDEPENDENT DAMPING SYSTEM

20 IDS CARTRIDGE

RECOMMENDED SETTINGS	
Fork stroke	116mm
Air gap/Oil level	140mm
Fork oil	5wt.
Spring rate	35-375-VAR
Comp damping	16 Clicks
Reb damping	16 Clicks
Fork position	See Manufacturer's Specification.

INTRODUCTION

The IDS (Independent Damping System) has been designed exclusively for Road and Track conditions. The cartridges are designed and manufactured in the UK using the highest quality materials and processes available. The system provides the rider greater feel and control over the standard equipment.

K-Tech Suspension Ltd products are manufactured to fit specific brands and models. Under no circumstances should any K-Tech Suspension Ltd products be fitted to an application other than that for which it has been designed, tested and manufactured.

SERVICE

K-Tech Suspension Ltd recommend that this product is serviced every 10,000 miles of use. It is very important that this product is serviced by an authorised dealer, as there are special tools required to guarantee correct performance of this product. K-Tech Suspension Ltd cannot be held responsible for any damage caused to/by the product if a service is overdue or was not conducted by an authorised dealer.

www.ktechsuspension.com/service-centres-and-partners

ADJUSTMENT

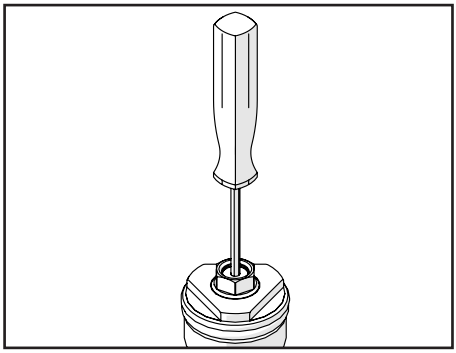

Compression Damping:-
Adjust using a 3mm allen key in the centre of the top cap (Black).
Adjustment range is 32 clicks.
All settings should be made from the fully closed (clockwise) position.

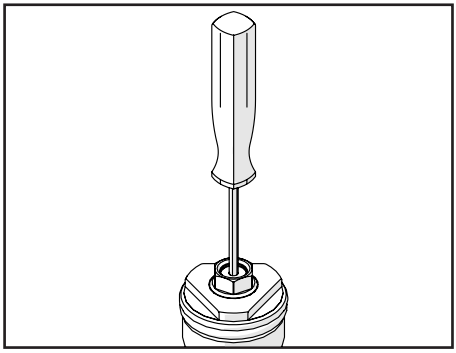

Rebound Damping:-
Adjust using a 3mm allen key in the centre of the top cap (Natural).
Adjustment range is 32 clicks.
All settings should be made from the fully closed (clockwise) position.

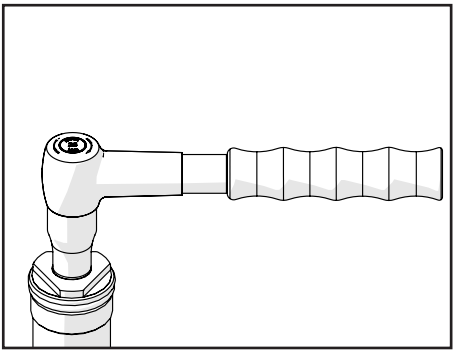

Preload Adjustment:-
Adjust using a 14mm socket on the hex in the centre of the top cap.
Adjustment range is 18 turns.
All settings should be made from the fully out (anti-clockwise) position.

www.ktechsuspension.com

Contact your local K-Tech dealer for more details at
www.ktechsuspension.com/service-centres-and-partners

©Copyright K-Tech Suspension Ltd 2017